PDP Series

Positive displacement dosing pump

Sandwich hydraulic diaphragm type with an internal relief-refilling valve

SDI

DOSEURO®

The right dosing choice

PDP Series

SUPPORTING ELEMENTS OF OUR PRODUCTS

Versatility

Different diaphragm sizes are available to suit different applications. Starting from 1,5 l/h to 4.000 l/h

Reliability

The use of quality materials along with a high degree of accuracy and repeatability assures maximum reliability for the sandwich diaphragm PDP series .

Quality

The best performance for each application is achieved through optimal selection of pump materials and diaphragm design .

DOSEURO®

Sandwich Hydraulic Diaphragm Dosing Pump

Type SD I

FEATURES

SDI Sandwich Hydraulic Diaphragm pumps are manufactured according API 675.
SD I pumps are suitable for use when:
- the liquid to dose contains small amounts of suspended solids
- the dosed liquid is a toxic solution
- liquid leaking are not accepted.

Is included on the pump an internal safety valve to protect the diaphragm against over pressure. The peculiarity of this pump is the special sandwich diaphragm and the reliability of the rupture diaphragm detention system .
Accuracy is better than 1% from 10 to 100% of the stroke adjustment

PUMPING HEADS

Pump heads are manufactured in standard materials: S.S.316 and PVC.
A wide range of other materials such as HASTELLOY, ALLOY, PTFE, PVDF and PP are also available .
Maximum temperature of fluids pumped:
- 60 °C with S.S. 316 pump head
- 40 °C with PVC pump head

Jacketed pump heads for either cooling and heating are available.

DIAPHRAGM

PTFE

DIAPHRAGM RUPTURE DETECTOR

Pressure gauge
Pressure switches
Ex-proof Pressure switches

SUCTION AND DISCHARGE CONNECTIONS

Standard : BSP male
Upon request: Flanged, UNI , ANSI or NPT.
All pumps use ball check valves as standard: single or double balls in each valve, determined by piston diameter or construction materials.

STROKE ADJUSTMENT

Flow rate adjustment is possible while the pump is running or stopped. The movement of the diaphragm is based on a precise reciprocating gearbox which provides an exact volumetric displacement. Stroke adjustment can be carried out by the following:
- Manual: by a linear micrometer stroke knob.
- Electrical: via servo motor with 4-20 mA input signal or interfaced with PROFIBUS or other BUS.
- Pneumatic: by a pneumatic servo controller with signal from 3 to 15 PSI air input.

MULTIPLE HEADED PUMPS

Multiplex drive units with different performance can be coupled between them, independently from the size and stroke number.
Flow rate adjustment is possible while the pump is running or stopped.

"SDI" SERIES SANDWICH HYDRAULIC DIAPHRAGM PUMPS ARE AVAILABLE IN DIFFERENT MODELS:

SDI 250 : Stroke length 25 mm
SDI 350 : Stroke length 35 mm
The above models have different diaphragm sizes for varied capacities and pressures.

DOSEURO

PDP Series

Type SD I 250

STANDARD MATERIAL CONSTRUCTION

EXECUTION	03	05	07
Pumphead	PVC	S.S. 316	PP
Piston	S.S. 420 TEMP.	S.S. 420 TEMP.	S.S. 420 TEMP.
Valve ball	PYREX	S.S. 316	PYREX
Valve seat	PVC	S.S. 316	PP
Diaphragm	PTFE	PTFE	PTFE
Piston gasket	AU / NBR	AU / NBR	AU / NBR
Oil chamber	ALLUMINIUM / CAST IRON	ALLUMINIUM / CAST IRON	ALLUMINIUM / CAST IRON

PP = Polypropylene
S.S. 316 = Stainless steel 316
S.S. 420 TEMP. = Tempered stainless steel 420

Different executions upon request

GENERAL DIMENSIONS IN mm

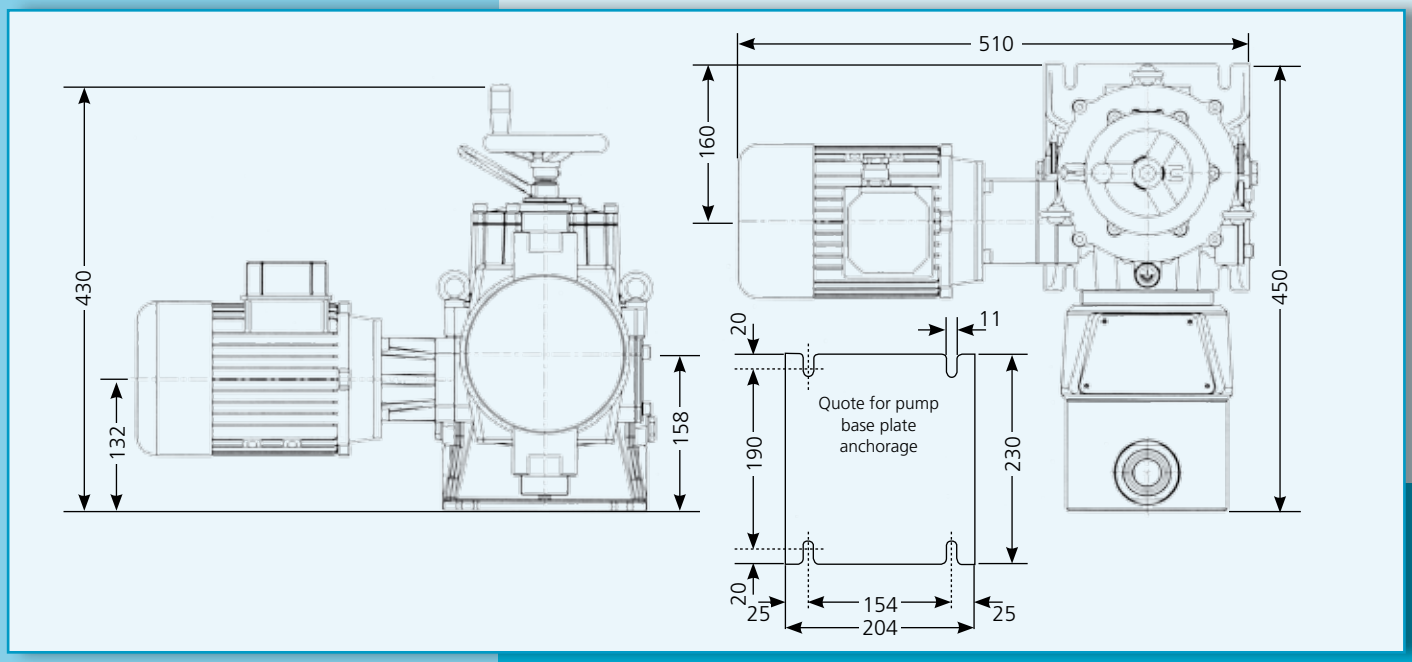

General dimensional quote are indicative and adverted to the maximum acceptable pump dimension

DOSEURO®

Positive displacement sandwich Hydraulic diaphragm dosing pump

TECHNICAL GUIDE

Pump type	Reducer ratio			Capacity				Max Press. Kg/cm²						Connections			Piston Diam.	Diaphrag. Diam.
		SPM		L/1'		L/h		SS316			PVC			Threaded	Flanged			
	(*1)	50 Hz	60 Hz	50 Hz	60 Hz	50 Hz	60 Hz	0,55 kW	0,75 kW	1,1 kW	0,55 kW	0,75 kW	1,1 kW	ø G.m.	UNI	ANSI	ø mm	ø mm
SD I 250 - 8	I	36	43	0,03	0,040	2	2,4	14	//	//	7	//	//	1 / 2 "	15	1 / 2 "	8	65/50
	F	58	70	0,06	0,070	3,5	4,2											
	C	100	120	0,10	0,120	6	7,2											
	B	116		0,12		7												
SD I 250 - 12	F	58	70	0,13	0,160	8	9,6	14	//	//	7	//	//	1 / 2 "	15	1 / 2 "	12	85/70
	C	100	120	0,23	0,270	13,5	16,2											
	B	116		0,27		16,00												
SD I 250 - 18	F	58	70	0,32	0,380	19	22,8	14	//	//	7	//	//	1 / 2 "	15	1 / 2 "	18	85/70
	C	100	120	0,54	0,650	32,5	39,0											
	B	116		0,63		38												
SD I 250 - 25	F	58	70	0,64	0,770	38,5	46,2	14	//	//	7	//	//	1 / 2 "	15	1 / 2 "	25	105/90
	C	100	120	1,10	1,320	66	79,2											
	B	116		1,28		77												
SD I 250 - 30	F	58	70	0,92	1,100	55	66,0	14	//	//	7	//	//	1 / 2 "	15	1 / 2 "	30	135/120
	C	100	120	1,58	1,900	95	114,0											
	B	116		1,85		111												
SD I 250 - 40	F	58	70	1,68	2,020	101	121,2	7,2	//	//	7	//	//	3 / 4 "	20	3 / 4 "	40	135/120
	C	100	120	2,88	3,460	173	207,6											
	B	116		3,37		202												
SD I 250 - 50	F	58	70	2,63	3,160	158	189,6	7,2	//	//	7	//	//	3 / 4 "	20	3 / 4 "	50	135/120
	C	100	120	4,52	5,420	271	325,2											
	B	116		5,27		316												
SD I 250 - 55	F	58	70	3,18	3,820	191	229,2	7,2	//	//	7	//	//	3 / 4 "	20	3 / 4 "	55	135/120
	C	100	120	5,47	6,560	328	393,6											
	B	116		6,37		382												
SD I 250 - 65	F	58	70	4,47	5,360	268	321,6	7	//	//	7	//	//	1 "	25	1 "	65	180/160
	C	100	120	7,63	9,160	458	549,6											
	B	116		8,90		534												
SD I 250 - 75	F	58	70	5,93	7,120	356	427,2	6	//	//	6	//	//	1 "	25	1 "	75	180/160
	C	100	120	10,15	12,180	609	730,8	4,6	6	//	4,6	6	//					
	B	116		11,85		711		4,3	5,7	6	4,3	5,7	6					
SD I 250 - 90	F	58	70	8,53	10,240	512	614,4	5,4	//	//	5,4	//	//	1 "	25	1 "	90	180/160
	C	100	120	14,62	17,540	877	1052,4	4,3	5,4	//	4,3	5,4	//					
	B	116		17,07		1024		3,3	4,3	5,4	3,3	4,3	5,4					
SD I 250 - 100	F	58	70	10,53	12,640	632	758,4	4,2	//	//	4,2	//	//	1-1 /2 "	40	1-1 /2 "	100	215/190
	C	100	120	18,07	21,680	1084	1300,8	3,1	4,2	//	3,1	4,2	//					
	B	116		21,07		1264		2,8	3,8	4,2	2,8	3,8	4,2					
SD I 250 - 110	F	58	70	12,75	15,300	765	918,0	3,3	//	//	3,3	//	//	2 "	50	2 "	110	215/190
	C	100	120	21,85	26,220	1311	1573,2	2,6	3,3	//	2,6	3,3	//					
	B	116		25,50		1530		2,2	3	3,3	2,2	3	3,3					
SD I 250 - 120	F	58	70	15,17	18,200	910	1092,0	2,8	//	//	2,8	//	//	2 "	50	2 "	120	245/220
	C	100	120	26,02	31,220	1561	1873,2	2	2,8	//	2	2,8	//					

(*1) Piston's strokes number during 1 minute with 4 poles installed motor
I = Reducer ratio 1 : 38 = 36 strokes at 50 Hz / 43 strokes at 60 Hz
F = Reducer ratio 1 : 24 = 58 strokes at 50 Hz / 70 strokes at 60 Hz
C = Reducer ratio 1 : 14 = 100 strokes at 50 Hz / 120 strokes at 60 Hz
B = Reducer ratio 1 : 12 = 116 strokes at 50 Hz / 120 strokes at 60 Hz (not suitable)
(*2) The indicated capacity value is subject to changes due to the working pressure, the dosed liquid, the viscosity and the installation asset.
(*3) For capacity value at 60 Hz the max pressure indicate MUST BE DECREASE OF 20%
(4) The pumps can be supplied with acessories if requested

DOSEURO®

PDP Series

Type SD I 350

STANDARD MATERIAL CONSTRUCTION

EXECUTION	03	05	07
Pumphead	PVC	S.S. 316	PP
Piston	S.S. 420 TEMP.	S.S. 420 TEMP.	S.S. 420 TEMP.
Valve ball	PYREX	S.S. 316	PYREX
Valve seat	PVC	S.S. 316	PP
Diaphragm	PTFE	PTFE	PTFE
Piston gasket	AU / NBR	AU / NBR	AU / NBR
Oil chamber	ALLUMINIUM / CAST IRON	ALLUMINIUM / CAST IRON	ALLUMINIUM / CAST IRON

PP = Polypropylene
S.S. 316 = Stainless steel 316
S.S. 420 TEMP. = Tempered stainless steel 420
Different executions upon request

GENERAL DIMENSIONS IN mm

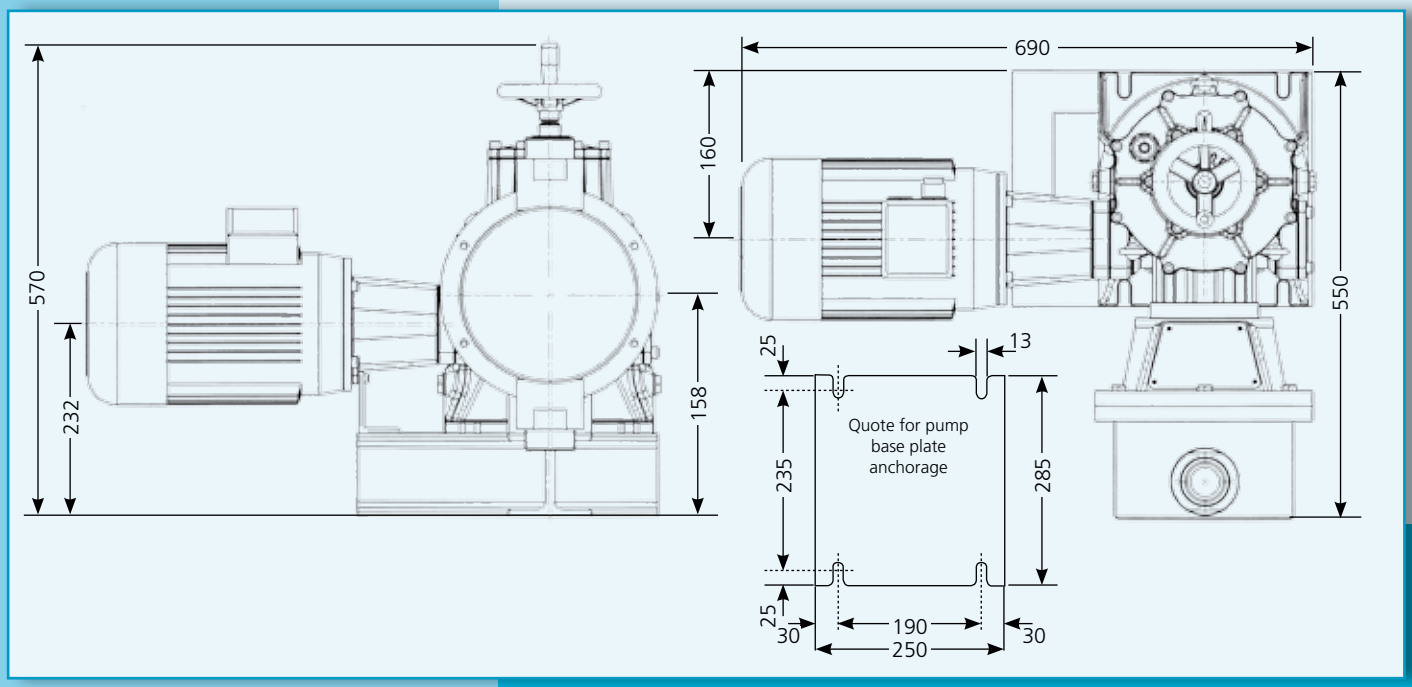

General dimensional quote are indicative and adverted to the maximum acceptable pump dimension

DOSEURO

Positive displacement sandwich Hydraulic diaphragm dosing pump

TECHNICAL GUIDE

Pump type	Reducer ratio			Capacity				Max Press. Kg/cm²						Connections			Piston Diam.	Diaphrag. Diam.
		SPM		L/1'		L/h		SS316			PVC			Threaded	Flanged			
	(*1)	50 Hz	60 Hz	50 Hz	60 Hz	50 Hz	60 Hz	1,1 kW	1,5 kW	2,2 kW	1,1 kW	1,5 kW	2,2 kW	ø G.m.	UNI	ANSI	ø mm	ø mm
SD I 350 - 30	F	51	61	1,15	1,380	69	82,8	14	//	//	7	//	//	1 / 2 "	15	1 / 2 "	30	105/90
	C	90	108	2,00	2,400	120	144,0											
	B	103	124	2,30	2,760	138	165,6											
	A	121		2,72		163												
SD I 350 - 40	F	51	61	2,10	2,520	126	151,2	8,5	//	//	7	//	//	3 / 4 "	20	3 / 4 "	40	135/120
	C	90	108	3,65	4,380	219	262,8											
	B	103	124	4,20	5,040	252	302,4											
	A	121		4,92		295												
SD I 350 - 50	F	51	61	3,28	3,940	197	236,4	7	//	//	7	//	//	1 "	25	1 "	50	160/140
	C	90	108	5,70	6,840	342	410,4											
	B	103	124	6,55	7,860	393	471,6											
	A	121		7,70		462												
SD I 350 - 55	F	51	61	3,97	4,760	238	285,6	7	//	//	7	//	//	1 "	25	1 "	55	160/140
	C	90	108	6,90	8,280	414	496,8											
	B	103	124	7,93	9,520	476	571,2											
	A	121		9,30		558												
SD I 350 - 65	F	51	61	5,53	6,640	332	398,4	7	//	//	7	//	//	1 "	25	1 "	65	180/160
	C	90	108	9,65	11,580	579	694,8											
	B	103	124	11,08	13,300	665	798,0											
	A	121		13,00		780												
SD I 350 - 70	F	51	61	6,42	7,700	385	462,0	7	//	//	7	//	//	1 "	25	1 "	70	180/160
	C	90	108	11,18	13,420	671	805,2											
	B	103	124	12,85	15,420	771	925,2											
	A	121		15,08		905												
SD I 350 - 75	F	51	61	7,37	8,840	442	530,4	7	//	//	7	//	//	1 "	25	1 "	75	180/160
	C	90	108	12,85	15,420	771	925,2	7			7							
	B	103	124	14,75	17,700	885	1062,0	7			7							
	A	121		17,32		1039		6,5			6,5							
SD I 350 - 85	F	51	61	9,47	11,360	568	681,6	7	//	//	7	//	//	1-1/2 "	40	1-1 /2 "	85	215/190
	C	90	108	16,50	19,800	990	1188,0	7	//		7	//						
	B	103	124	18,93	22,720	1136	1363,2	6	7		6	7						
	A	121		22,23		1334		5,2	7		5,2	7						
SD I 350 - 90	F	51	61	10,62	12,740	637	764,4	7	//	//	7	//	//	1-1/2 "	40	1-1 /2 "	90	215/190
	C	90	108	18,50	22,200	1110	1332,0	6,3	7	//	6,3	7	//					
	B	103	124	21,23	25,480	1274	1528,8	5,2	7	//	5,2	7	//					
	A	121		24,93		1496		4,5	6,3	7	4,5	6,3	7					
SD I 350 - 100	F	51	61	13,12	15,740	787	944,4	7	//	//	7	//	//	1-1/2 "	40	1-1 /2 "	100	245/220
	C	90	108	22,83	27,400	1370	1644,0	5	7	//	5	7	//					
	B	103	124	26,22	31,460	1573	1887,6	4,2	6	7	4,2	6	7					
SD I 350 - 110	F	51	61	15,87	19,040	952	1142,4	6,6	//	//	6,6	//	//	2 "	50	2 "	110	245/220
	C	90	108	27,63	33,160	1658	1989,6	4,2	5,6	6,6	4,2	5,6	6,6					
	B	103	124	31,73	38,080	1904	2284,8	3,5	5	6,6	3,5	5	6,6					
SD I 350 - 120	F	51	61	18,88	22,660	1133	1359,6	5,6	//	//	5,6	//	//	2 "	50	2 "	120	245/220
	C	90	108	32,88	39,460	1973	2367,6	3,5	5	5,6	3,5	5	5,6					
	B	103	124	37,77	45,320	2266	2719,2	3,1	4,2	5,6	3,1	4,2	5,6					
SD I 350 - 130	F	51	61	22,15	26,580	1329	1594,8	4,7	//	//	4,7	//	//	2 "	50	2 "	130	265/240
	C	90	108	38,60	46,320	2316	2779,2	2,9	3,8	4,7	2,9	3,8	4,7					
	B	103	124	44,32	53,180	2659	3190,8	2,5	3,3	4,7	2,5	3,3	4,7					
SD I 350 - 140	F	51	61	25,70	30,840	1542	1850,4	4	//	//	4	//	//	2 "	50	2 "	140	265/240
	C	90	108	44,77	53,720	2686	3223,2	2,2	3,3	4	2,2	3,3	4					
	B	103	124	51,40	61,680	3084	3700,8	2	2,9	4	2	2,9	4					
SD I 350 - 150	F	51	61	29,50	35,400	1770	2124,0	3,5	//	//	3,5	//	//	2 "	50	2 "	150	285/260
	C	90	108	51,38	61,660	3083	3699,6	2,1	3	3,5	2,1	3	3,5					
	B	103	124	59,00	70,800	3540	4248,0	1,9	2,6	3,5	1,9	2,6	3,5					
SD I 350 - 160	F	51	61	33,57	40,280	2014	2416,8	3,1	//	//	3,1	//	//	2 "	50	2 "	160	285/260
	C	90	108	58,47	70,160	3508	4209,6	1,9	2,4	3,1	1,9	2,4	3,1					
	B	103	124	67,13		4028		1,6	2,1	3,1	1,6	2,1	3,1					

(*1) Piston's strokes number during 1 minute with 4 poles installed motor
F = Reducer ratio 1 : 27 = 51 strokes at 50 Hz / 61 strokes at 60 Hz; C = Reducer ratio 1 : 15,5 = 90 strokes at 50 Hz / 108 strokes at 60 Hz
B = Reducer ratio 1 : 13,5 = 103 strokes at 50 Hz / 124 strokes at 60 Hz; A = Reducer ratio 1 : 11,5 = 121 strokes at 50 Hz / 144 strokes at 60 Hz (not suitable)
(*2) The indicated capacity value is subject to changes due to the working pressure, the dosed liquid, the viscosity and the installation asset.
(*3) For capacity value at 60 Hz the max pressure indicate MUST BE DECREASE OF 20%
(4) The pumps can be supplied with acessories if requested

DOSEURO®

PDP Series

Type AP SD I 250

STANDARD MATERIAL CONSTRUCTION

EXECUTION	06
Pumphead	S.S. 316
Piston	S.S. 420 TEMP.
Valve ball	S.S. 316
Valve seat	S.S. 316
Diaphragm	PTFE
Piston gasket	AU / NBR
Oil chamber	ALLUMINIUM / CAST IRON

PP = Polypropylene
S.S. 316 = Stainless steel 316
S.S. 420 TEMP. = Tempered stainless steel 420

Different executions upon request

TECHNICAL GUIDE

Pump type	Reducer ratio			Capacity				Max Press. Kg/cm²			Connections			Piston Diam.	Diaphrag. Diam.
		SPM		L/1′		L/h		SS316			Threaded	Flanged			
	(*1)	50 Hz	60 Hz	50 Hz	60 Hz	50 Hz	60 Hz	0,55 kW	0,75 kW	1,1 kW	ø G.m.	UNI	ANSI	ø mm	ø mm
SD I 250 - 8	I	36	43	0,03	0,040	2	2,4	80	//	//	1 / 2 "	15	1 / 2 "	8	65/50
	F	58	70	0,06	0,070	3,5	4,2								
	C	100	120	0,10	0,120	6	7,2								
	B	116		0,12		7									
SD I 250 - 12	F	58	70	0,13	0,160	8	9,6	80	//	//	1 / 2 "	15	1 / 2 "	12	85/70
	C	100	120	0,23	0,270	13,5	16,2								
	B	116		0,27		16,00									
SD I 250 - 18	F	58	70	0,32	0,380	19	22,8	56	//	//	1 / 2 "	15	1 / 2 "	18	85/70
	C	100	120	0,54	0,650	32,5	39,0								
	B	116		0,63		38									
SD I 250 - 25	F	58	70	0,64	0,770	38,5	46,2	56	//	//	1 / 2 "	15	1 / 2 "	25	85/70
	C	100	120	1,10	1,320	66	79,2	51	56						
	B	116		1,28		77		44	56						
SD I 250 - 30	F	58	70	0,92	1,100	55	66,0	47	//	//	1 / 2 "	15	1 / 2 "	30	105/90
	C	100	120	1,58	1,900	95	114,0	36	47	//					
	B	116		1,85		111		26	36	47					
SD I 250 - 40	F	58	70	1,68	2,020	101	121,2	26	//	//	3 / 4 "	20	3 / 4 "	40	135/120
	C	100	120	2,88	3,460	173	207,6	20	26	//					
	B	116		3,37		202		16	20	26					
SD I 250 - 50	F	58	70	2,63	3,160	158	189,6	16,5	//	//	3 / 4 "	20	3 / 4 "	50	135/120
	C	100	120	4,52	5,420	271	325,2	11	16,5	//					
	B	116		5,27		316		9,5	13	16,5					
SD I 250 - 55	F	58	70	3,18	3,820	191	229,2	13,5	//	//	3 / 4 "	20	3 / 4 "	55	135/120
	C	100	120	5,47	6,560	328	393,6	10,5	13,5	//					
	B	116		6,37		382		9	10,5	13,5					
SD I 250 - 65	F	58	70	4,47	5,360	268	321,6	10	//	//	1 "	25	1 "	65	180/160
	C	100	120	7,63	9,160	458	549,6	7,7	10	//					
	B	116		8,90		534		6,5	7,5	10					
SD I 250 - 75	F	58	70	5,93	7,120	356	427,2	7	//	//	1 "	25	1 "	75	180/160
	C	100	120	10,15	12,180	609	730,8	5,5	7	//					
	B	116		11,85		711		4,6	5,5	7					

(*1) Piston's strokes number during 1 minute with 4 poles installed motor
I = Reducer ratio 1 : 38 = 36 strokes at 50 Hz / 43 strokes at 60 Hz
F = Reducer ratio 1 : 24 = 58 strokes at 50 Hz / 70 strokes at 60 Hz
C = Reducer ratio 1 : 14 = 100 strokes at 50 Hz / 120 strokes at 60 Hz
B = Reducer ratio 1 : 12 = 116 strokes at 50 Hz / 140 strokes at 60 Hz (not suitable)
(*2) The indicated capacity value is subject to changes due to the working pressure, the dosed liquid, the viscosity and the installation asset.
(*3) For capacity value at 60 Hz the max pressure indicate MUST BE DECREASE OF 20%
(4) The pumps can be supplied with acessories if requested

DOSEURO®

Positive displacement sandwich Hydraulic diaphragm dosing pump

Type AP SD I 350

TECHNICAL GUIDE

Pump type	Reducer ratio			Capacity				Max Press. Kg/cm²				Connections			Piston Diam.	Diaphrag. Diam.
		SPM		L/1'		L/h		SS316				Threaded	Flanged			
	(*1)	50 Hz	60 Hz	50 Hz	60 Hz	50 Hz	60 Hz	1,1 kW	1,5 kW	2,2 kW	3 kW	ø G.m.	UNI	ANSI	ø mm	ø mm
SD I 350 - 30	F	51	61	1,15	1,380	69	82,8	56	//	//	//	1 / 2 "	15	1 / 2 "	30	105/90
	C	90	108	2,00	2,400	120	144,0	56	//	//	//					
	B	103	124	2,30	2,760	138	165,6	49	56	//	//					
	A	121		2,72		163		41	56	//	//					
SD I 350 - 40	F	51	61	2,10	2,520	126	151,2	50	//	//	//	3 / 4 "	20	3 / 4 "	40	135/120
	C	90	108	3,65	4,380	219	262,8	31	43	50	//					
	B	103	124	4,20	5,040	252	302,4	27	38	50	//					
	A	121		4,92		295		23	32	47	50					
SD I 350 - 50	F	51	61	3,28	3,940	197	236,4	31	//	//	//	1 "	25	1 "	50	160/140
	C	90	108	5,70	6,840	342	410,4	19	25	31	//					
	B	103	124	6,55	7,860	393	471,6	16	22	31	//					
	A	121		7,70		462		14	19	28	31					
SD I 350 - 55	F	51	61	3,97	4,760	238	285,6	27	//	//	//	1 "	25	1 "	55	160/140
	C	90	108	6,90	8,280	414	496,8	17	23	27	//					
	B	103	124	7,93	9,520	476	571,2	15	20	27	//					
	A	121		9,30		558		12	17	24	27					
SD I 350 - 65	F	51	61	5,53	6,640	332	398,4	19	//	//	//	1 "	25	1 "	65	180/160
	C	90	108	9,65	11,580	579	694,8	12	16	19	//					
	B	103	124	11,08	13,300	665	798,0	10	14	19	//					
	A	121		13,00		780		138	12	17	19					
SD I 350 - 70	F	51	61	6,42	7,700	385	462,0	16	//	//	//	1 "	25	1 "	70	180/160
	C	90	108	11,18	13,420	671	805,2	10	14	16	//					
	B	103	124	12,85	15,420	771	925,2	9	12	16	//					
	A	121		15,08		905		8	10	15	16					
SD I 350 - 75	F	51	61	7,37	8,840	442	530,4	14	//	//	//	1 "	25	1 "	75	180/160
	C	90	108	12,85	15,420	771	925,2	9	12	14	//					
	B	103	124	14,75	17,700	885	1062,0	8	10	14	//					
	A	121		17,32		1039		7	9	13	14					
SD I 350 - 85	F	51	61	9,47	11,360	568	681,6	11	//	//	//	1-1 / 2 "	40	1-1 / 2 "	85	215/190
	C	90	108	16,50	19,800	990	1188,0	7	9	11	//					
	B	103	124	18,93	22,720	1136	1363,2	6	8	11	//					
	A	121		22,23		1334		5	7	10	11					
SD I 350 - 90	F	51	61	10,62	12,740	637	764,4	10	//	//	//	1-1 / 2 "	40	1-1 / 2 "	90	215/190
	C	90	108	18,50	22,200	1110	1332,0	6	8	10	//					
	B	103	124	21,23	25,480	1274	1528,8	5	7	10	//					
	A	121		24,93		1496		4	6	9	10					

(*1) Piston's strokes number during 1 minute with 4 poles installed motor
F = Reducer ratio 1 : 27 = 51 strokes at 50 Hz / 61 strokes at 60 Hz
C = Reducer ratio 1 : 15,5 = 90 strokes at 50 Hz / 108 strokes at 60 Hz
B = Reducer ratio 1 : 13,5 = 103 strokes at 50 Hz / 124 strokes at 60 Hz
A = Reducer ratio 1 : 11,5 = 121 strokes at 50 Hz / 144 strokes at 60 Hz (not suitable)
(*2) The indicated capacity value is subject to changes due to the working pressure, the dosed liquid, the viscosity and the installation asset.
(*3) For capacity value at 60 Hz the max pressure indicate MUST BE DECREASE OF 20%
(4) The pumps can be supplied with acessories if requested

DOSEURO®

PDP Series

Correct installation and

THE BENEFITS OF FLUID CONTROL ASSURE

- Increase efficiency and pump life.
- Decrease maintenance and operating costs.

The control of fluid dynamics is essential to ensure efficient and safe use of process systems. Uncontrolled fluid in motion can physically destroy a pumping system including the pumping, valves, meters, back pressure valves, in-line instrumentation and equipment.

1 FILTERS

We suggest to install filters (on the suction pipe) to keep back impurities that can be presented on liquid to dose or coming from pipeline system.
The use of filters assures a trouble-free dosing.

2 SAFETY VALVES

Safety valves are designed to protect the pump and chemical feed system from over pressure damage 'caused by defective equipment or a blockage in the chemical feed line.

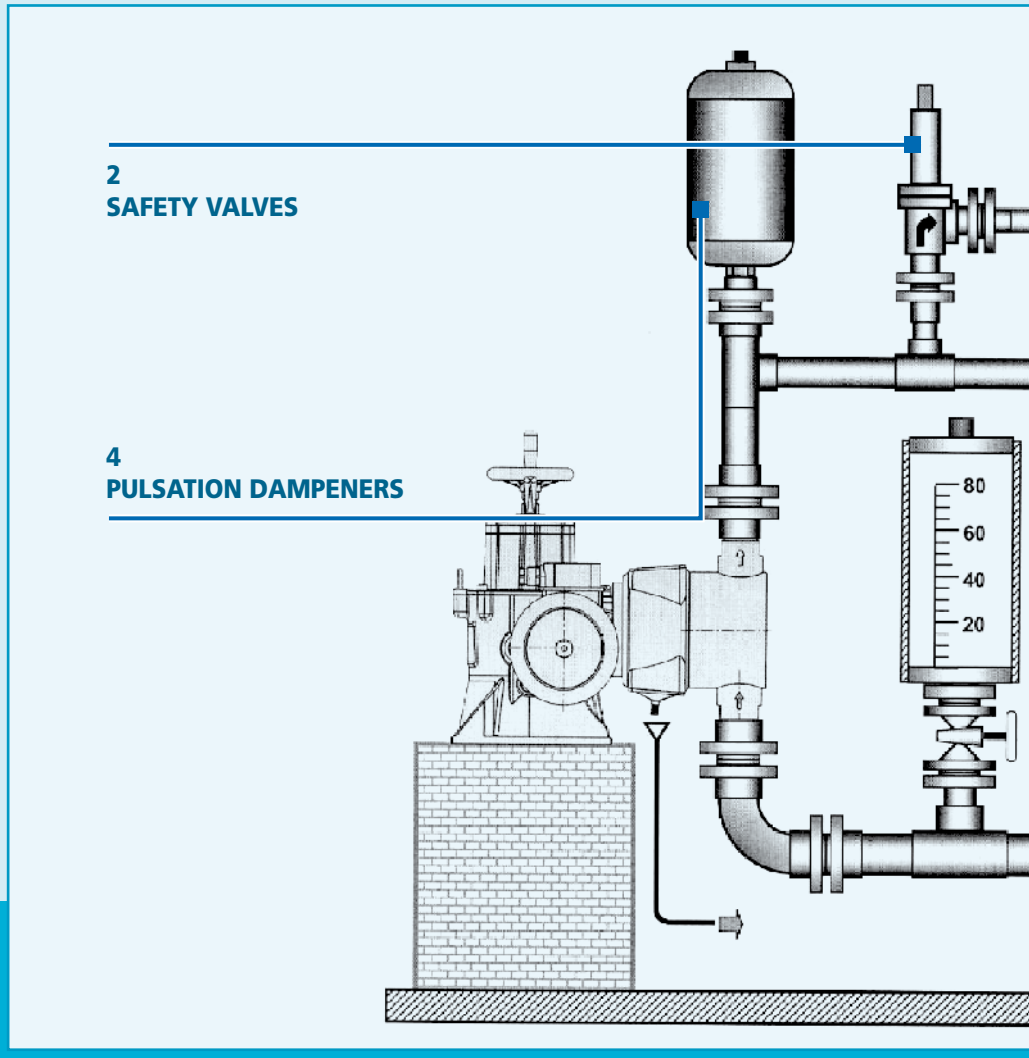

DOSEURO®

Positive displacement sandwich Hydraulic diaphragm dosing pump

accessories

3 BACK PRESSURE VALVES

Back pressure valves apply positive discharge pressure to a metering pump system to prevent siphoning and eliminate varying down-stream pressure.

4 PULSATION DAMPENER

Metering pumps have a pulsating flow. Both positive displacement pumps and quick closing valves start and stop fluids that are in motion. Positive displacement pumps derive their pumping action by capturing a given amount of fluid in a chamber and pushing it out the pump's discharge. Each pump cycle includes a suction stroke during which fluid flow is stopped. This pumping action produces an acceleration/deceleration of the fluid, creating units of uncontrolled energy, resulting in PULSATION, observed as pressure spikes.

Pulsation dampener is required for two reasons:

- To reduce high, non - permissible pressure fluctuations.
- To create a nearly continuous flow.

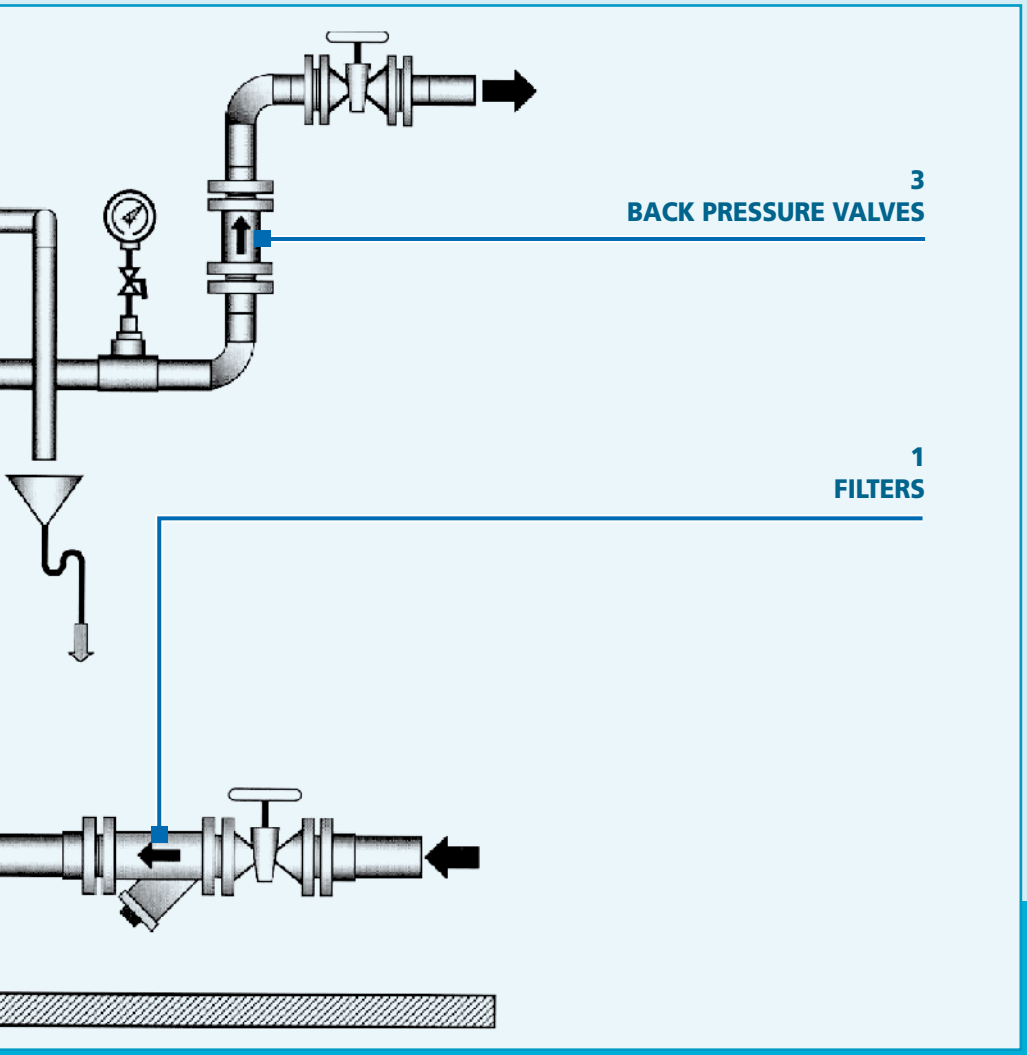

Our range of production also includes:

SR Series Spring Return:
Piston dosing pumps: type "A" and "AP-A"
Mechanical diaphragm dosing pumps: type "D" and "FM"
Hydraulic diaphragm dosing pumps: type "B" and "BR"
Sandwich hydraulic diaphragm dosing pumps: type "SD"

PDP Series Positive Displacement:
Piston dosing pumps: type "AI" and "AP-AI"
Hydraulic diaphragm dosing pumps: type "BI"

SDP Series:
Solenoid dosing pumps: type "S"
Solenoid dosing pumps: type "GA"

H Series:
Automatic plants for dissolution and preparation of powder polyelectrolytes:
type "HA" - "HB"- "HE" and "HA-P"

EM Series:
Electric Mixers for chemical mixing:
type "DAM", "DMT", "DEM", "DRV", "DRC" and "DVL"

ISOQAR QUALITY ASSURED ISO 9001
UKAS QUALITY MANAGEMENT 026

Standard Equipment & Controls
P.O. Box 330453
Atlantic Beach, Florida 32233
1-800-367-9230 Toll Free
1-904-223-4381 Office
1-904-223-5607 Fax
sales@standarde.com E-mail
www.standarde.com

HOME OFFICE
Via G. Carducci 141
20093 Cologno Monzese (MI) Italy
Tel.: +39 02 27301324
Fax: +39 02 26700883
e-mail: info@doseuro.com
www.doseuro.com

XNME0PDPGSDIG0010

DOSEURO®
The right dosing choice